KTO KTS SMALL COMPACT THERMOSTAT
小型自动恒温控制器

KTS 011(NO)

KTO 011(NC)

KTO 011/KTS 011

产品特性 Features

- 宽范围温度设置 Large setting range
- 小尺寸 Small size
- 安装简单 Simple to mount
- 灵敏度高 High switching performance

KTO 011: 温控器(常闭)，用于调控加热器。
KTS 011: 温控器(常开)，当温度超出设定值时开关装置可以启动风机或信号装置。

KTO 011: Thermostat (normally closed),contact breaker for regulating heaters.
KTS 011: Thermostat(normally open), contact maker for regulating of filter fans and heat exchangers or for switching signal devised when temperature limit has been exceeded.

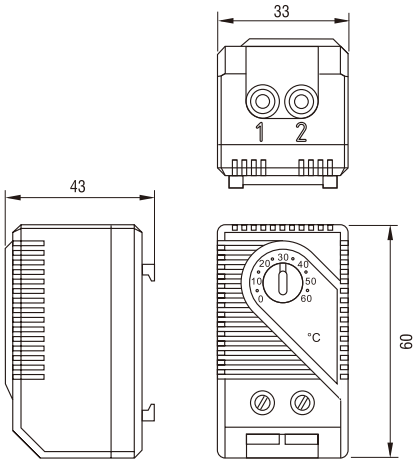

技术参数 Technical Data

开关温差Switch temperature difference	7K (±4K tolerance)
传感元件Sensor element	感温材料thermostatic bimetal
触点类型Contact type	快速动作接点snap-action contact
触点电阻Contact resistance	< 10mΩ
使用寿命Service life	> 100,000 cycles
开关最大容量 Max. Switching capacity	250VAC, 10 (2) A 120VAC, 15 (2) A DC 30W
EMC	acc. to EN 55014–1–2, EN 61000–3–2, EN 61000–3–3
接线方式Connection	2极接线端子2.5mm²导线 2-pole terminal,clamping torque 0.5Nm max.:rigid wire 2.5mm² stranded wire (with wire end ferrule) 1.5mm²
安装方式Mounting	35mm DIN轨道 clip for 35mm DIN rail,EN60715 or for exit filter EF 118 Series
外壳材料Casing	塑料UL94标准V-0防火等级, plastic according to UL94 V-0, light grey
外观尺寸Dimensions	60 x 33 x 43mm
重量Weight	约40克approx. 40g
安装位置Fitting position	任意variable
操作/储存温度Operating/Storage temperature	–20 to+80℃(–4 to +176°F) /–45 to+80℃(–49 to +176°F)
防护等级Protection type	IP20

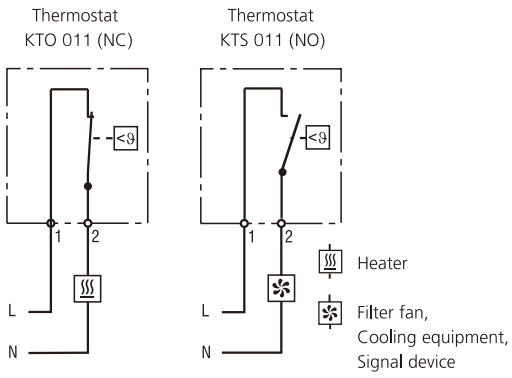

接线示意图 Example of connection

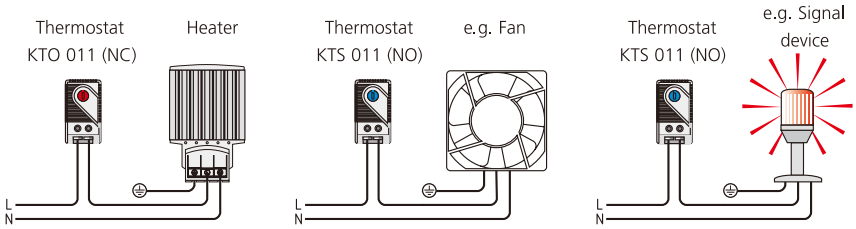

接线示意图 Example of connection

设定范围 Setting range	订货代码 Art. No. Contact Breaker (NC)	订货代码 Art. No. Contact Breaker (NO)	产品证书 Approvals
0 to +60℃	01140.0-00	01141.0-00	CE
-10 to +50℃	01142.0-00	01143.0-00	CE
+20 to +80℃	01159.0-00	01158.0-00	CE
+32 to +140°F	01140.9-00	01141.9-00	CE
+14 to +122°F	01142.9-00	01143.9-00	CE
0 to +60℃	01146.9-00	01147.9-00	CE

ZR 011

产品特性 Features

- 常开常闭一体化设计NO and NC in one casing
- 温度独立控制Separate adjustable temperatures
- 灵敏度高High switching capacity
- 易操作Terminals easily accessible
- 导轨安装DIN rail mounted

加热散热两用型温控器；常闭用于调控加热器；常开用于调控风机或开关信号装置。

Two thermostats in one casing:
Thermostat (contact breaker, normally closed) for regulating heaters.
Thermostat (contact maker, normally open) for regulating filter fans and heat exchangers or switching signal devices when temperature limit has been exceeded. Heaters and cooling equipment can be switched independently from each other with a temperature offset as opposed to the usual change-over contacts.

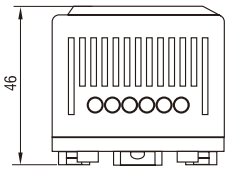

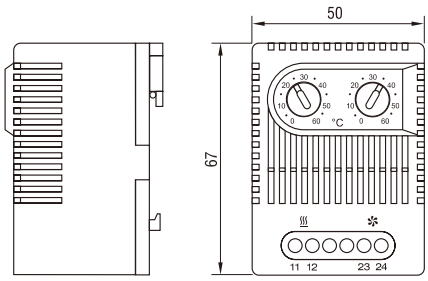

技术参数 Technical Data

开关温差Switch temperature difference	7K (±4K tolerance)
传感元件Sensor element	感温材料thermostatic bimetal
触点类型Contact type	快速动作接点snap-action contact
触点电阻Contact resistance	< 10mΩ
使用寿命Service life	> 100,000 cycles
开关最大容量 Max. Switching capacity	250VAC, 10 (2) A 120VAC, 15 (2) A DC 30W
EMC	acc. to EN 55014-1-2, EN 61000-3-2, EN 61000-3-3
接线方式Connection	4极接线端子2.5mm²导线 4-pole terminal,clamping torque 0.5Nm max.:rigid wire 2.5mm² stranded wire (with wire end ferrule) 1.5mm²
安装方式Mounting	35mm DIN轨道 clip for 35mm DIN rail,EN60715 or for exit filter EF 118 Series
外壳材料Casing	塑料UL94标准V-0防火等级, plastic according to UL94 V-0, light grey
外观尺寸Dimensions	67 x 50 x 46mm
重量Weight	approx. 90g
安装位置Installation position	任意variable
操作/储存温度Operating/Storage temperature	-20 to+80℃(-4 to +176°F) /-45 to+80℃(-49 to +176°F)
防护等级Protection type	IP20

Thermostat
ZR 011 (NC/NO)

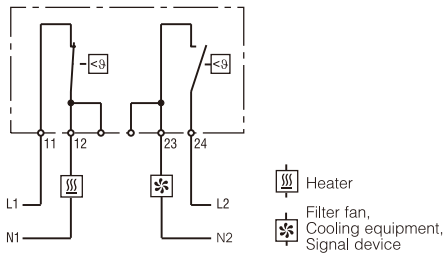

接线示意图 Example of connection

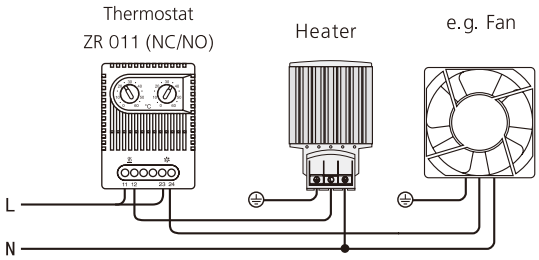

接线示意图 Example of connection

订货代码 Art. No.	设定范围 Setting range		设定范围 Setting range	
01172.0-00	contact breaker, normally closed	0 to +60℃	contact maker, normally open	0 to +60℃
01172.0-01	contact breaker, normally closed	+32 to +140°F	contact maker, normally open	+32 to +140°F
01175.0-00	contact breaker, normally closed	-10 to +50℃	contact maker, normally open	+20 to +80℃
01175.0-01	contact breaker, normally closed	+14 to +122°F	contact maker, normally open	+68 to +176°F
01176.0-00*	contact maker, normally open	0 to +60℃	contact maker, normally open	0 to +60℃
01176.0-01*	contact maker, normally open	+32 to +140°F	contact maker, normally open	+32 to +140°F

MECHANICAL THERMOSTAT
机械式温控器

FZK 021

产品特性 Features

- 可调节温度Adjustable temperature
- 高分断能力High switching capacity
- 低磁滞后Small hysteresis
- 端子易接入Terminals easily accessible
- 导轨安装DIN rail mounted
- 转换接点Change–over contact

机械式恒温器是用于控制加热器和冷风机或信号装置。

The mechanical thermostat is used for controlling heating and cooling equipment, filter fans or signal devices. The thermostat registers the surrounding air and can switch both inductive and resistive loads via snap-action contact.

技术参数 Technical Data

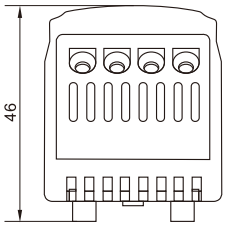

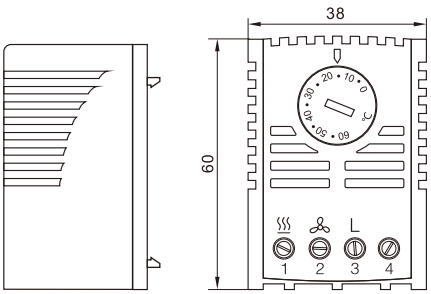

开关温差Switch temperature difference	4K (±1.5K tolerance)
传感元件Sensor element	感温材料Thermostatic bimetal
触点类型Contact type	快速动作接点Snap–action contact
触点电阻Contact resistance	< 10mΩ
使用寿命Service life	> 100,000 cycles
开关最大容量 Max. Switching capacity	250VAC, 10 (4) A 120VAC, 10 (4) A DC 30W
最大开关容量NC Max. Switching capacity, NC	250VAC, 5 (2) A 120VAC, 5 (2) A DC 30W
EMC	acc. To EN 55014–1–2, EN 61000–3–2, EN 61000–3–3
接线方式Connection	4极接线端子2.5mm²导线 4–pole terminal,clamping torque 0.5Nm max.:rigid wire 2.5mm² stranded wire (with wire end ferrule) 1.5mm²
安装方式Mounting	35mm DIN轨道 clip for 35mm DIN rail,EN60715 or for exit filter EF 118 Series
外壳材料Casing	塑料UL94标准V-0防火等级, plastic according to UL94 V-0, light grey
外观尺寸Dimensions	67 x 50 x 38mm
重量Weight	Approx. 0.10kg
安装方式Fitting position	任意variable
操作/储存温度Operating/Storage temperature	-20 to +80℃ (-4 to +176°F) / –45 to +80℃ (–49 to +176°F)
防护等级Protection type	IP20

*连接端子N(RF加热电阻器)可反馈热量信号，从而减少温差大约0.5K。

*Connecting terminal "N" (RF heating resistor) causes the thermal feedback to work and so reduces the switch temperature difference to approx. 0.5K.

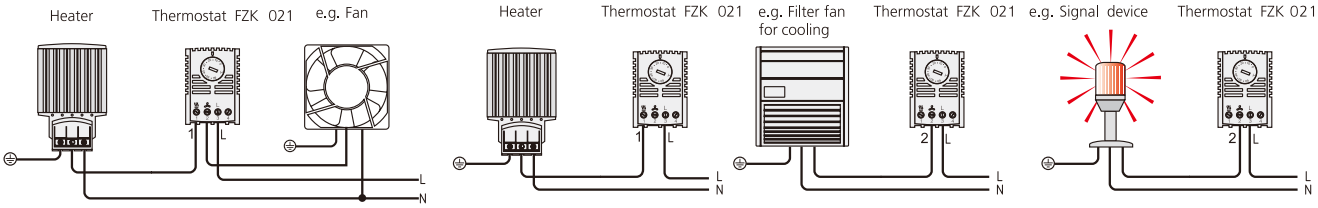

接线示意图 Example of connection

订货代码 Art. No.	操作电压 Operating voltage	设定范围 Setting range
01170.0-00	230VAC	+5 to +60℃
01170.0-01	230VAC	+40 to +140°F
01170.0-02	230VAC	–20 to +30℃
01170.9-00	120VAC	+40 to +140°F
01170.9-01	120VAC	+5 to +60°F

STF 012

产品特性 Features

- 温度和湿度都可调节Temperature and humidity adjustable
- LED显示Optical operating display (LED)
- 高分断能力High switching capacity
- 导轨安装DIN rail mounted

电子式温湿度传感器能根据环境温度与相对湿度来控制加热器和风机的打开与关闭。

Electronic temperature and humidity sensor can control the on & off of the heater and fan according to ambient temperature and relative humidity.

技术参数 Technical Data

开关温差Switch temperature difference	2K (±1K tolerance)at 25℃/77°F (50% RH)
开关湿度差Switch difference(humidity)	4% RH (±1% tolerance) at 25℃ /77° F (50% RH)
反应时间Reaction time (humidity)	approx. 5 sec.
触点类型Contact type	转换触点change–over contact (relay)
触点电阻Contact resistance	< 10mΩ
使用寿命 Service life	NC: > 50,000 cycles NO: > 100,000 cycles
最大开关容量 Max. Switching capacity (Relay output)	NC: 240VAC, 6 (1) A NO: 240VAC, 8 (1.6) A NC: 120VAC, 6 (1) A NO: 120VAC, 8 (1.6) A 24VDC, 4A
EMC	acc. to EN 55014–1–2, EN 61000–3–2, EN 61000–3–3
指示灯Optical indicator	LED
接线方式Connection	5极接线端子2.5mm²导线 5-pole terminal,clamping torque 0.5Nm max.:rigid wire 2.5mm² stranded wire (with wire end ferrule) 1.5mm²
安装方式Mounting	35mm DIN轨道 clip for 35mm DIN rail,EN6075 or for exit filter EF 118 Series
外壳材料Casing	塑料UL94标准V-0防火等级, plastic according to UL94 V-0, light grey
外观尺寸Dimensions	77 x 60 x 43mm
重量Weight	approx. 0.20kg
安装位置Installation position	任意vertical
操作/储存温度Operating/Storage temperature	0 to +60℃ (+32 to +140°F) / –20 to +80℃ (–4 to +176°F)
防护等级Protection type	IP20

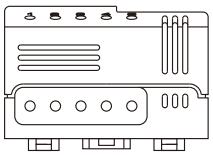

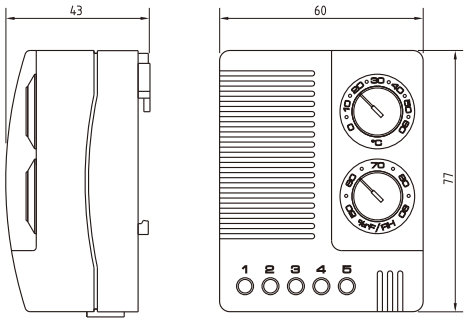

Connection diagram

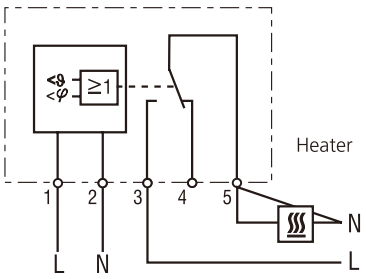

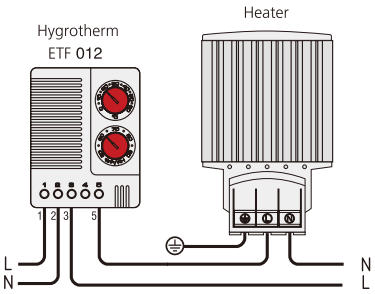

接线示意图 Example of connection

订货代码 Art. No.	操作电压 Operating voltage	温度设定范围 Setting range temperature	湿度设定范围 Setting range humidity
S1230.0-00	230VAC, 50/60Hz	0 to +60 ℃	50 to 90% RH
S1230.9-00	120VAC, 50/60Hz	+32 to +140 °F	50 to 90% RH
S1230.9-01	120VAC, 50/60Hz	0 to +60℃	50 to 90% RH

ETR ELECTRONIC THERMOSTAT
电子式温度控制器

ETR 011

产品特性 Features

- 可调节温度Adjustable temperature
- LED显示Optical operating display (LED)
- 高分断能力High switching capacity
- 导轨安装DIN rail mounted

电子式温度传感器能根据环境温度来控制加热器的打开与关闭。

Electronic temperature sensors can control the on & off of heater according to the ambient temperature.

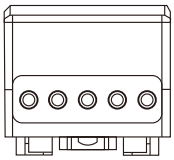

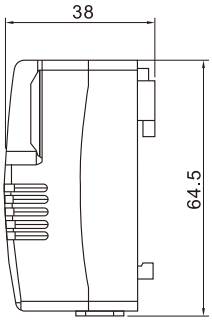

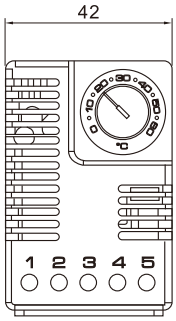

技术参数 Technical Data

开关温差Switch temperature difference	2K (± 1K tolerance)at 25℃/77° F (50% RH)
反应时间Reaction time (humidity)	approx. 5 sec.
触点类型Contact type	转换触点change–over contact (relay)
触点电阻Contact resistance	< 10mΩ
使用寿命 Service life	NC: > 50,000 cycles NO: > 100,000 cycles
最大开关容量 Max. Switching capacity (Relay output)	NC: 240VAC, 6 (1) A NO: 240VAC, 8 (1.6) A NC: 120VAC, 6 (1) A NO: 120VAC, 8 (1.6) A 24VDC, 4A
EMC	acc. to EN 55014–1–2, EN 61000–3–2, EN 61000–3–3
指示灯Optical indicator	LED
接线方式Connection	5极接线端子2.5mm²导线 5-pole terminal,clamping torque 0.5Nm max.:rigid wire 2.5mm² stranded wire (with wire end ferrule) 1.5mm²
安装方式Mounting	35mm DIN轨道 clip for 35mm DIN rail,EN6075 or for exit filter EF 118 Series
外壳材料Casing	塑料UL94标准V-0防火等级, plastic according to UL94 V-0, light grey
外观尺寸Dimensions	64.5 x 42 x 38mm
重量Weight	approx. 70g
安装位置Installation position	任意vertical
操作/储存温度Operating/Storage temperature	0 to +60℃ (+32 to +140°F) / –20 to +80℃ (–4 to +176°F)
防护等级Protection type	IP20

Connection diagram

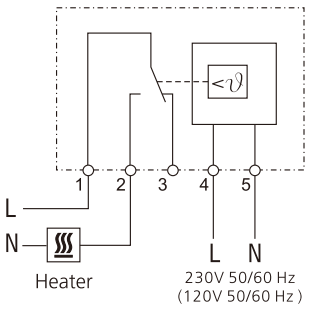

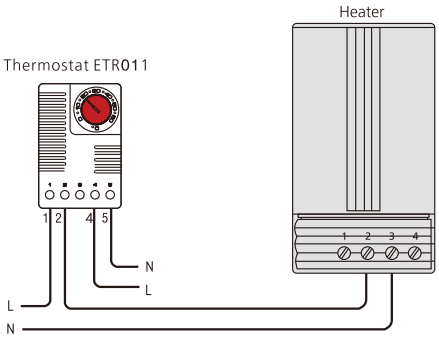

接线示意图 Example of connection

订货代码 Art. No.	操作电压 Operating voltage	温度设定范围 Setting range temperature	湿度设定范围 Setting range humidity
01131.0-00	230VAC, 50/60Hz	-20 to +60 ℃	CSA-US (VDE submitted)
01131.9-00	120VAC, 50/60Hz	–4 to +140 °F	140°F CSA-US

FZK 011

产品特性 Features

- 可调节温度Adjustable temperature
- 高分断能力High switching capacity
- 低磁滞后Small hysteresis
- 端子易接入Terminals easily accessible
- 导轨安装DIN rail mounted
- 转换接点Change-over contact

电子式恒温器是用于控制加热器和冷风机或信号装置。

The electronic thermostat is used for controlling heating and cooling equipment, filter fans or signal devices. The thermostat registers the surrounding air and can switch both inductive and resistive loads via snap-action contact.

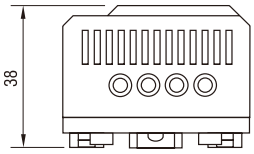

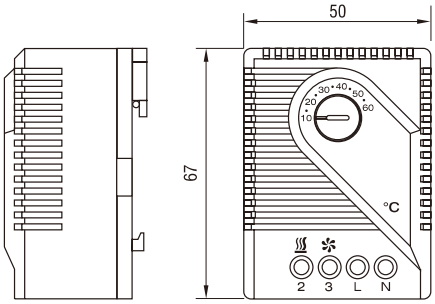

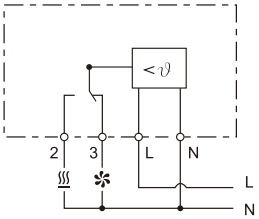

Connection diagram

技术参数 Technical Data

开关温差Switch temperature difference	4K (± 1.5K tolerance)
传感元件Sensor element	感温材料Thermostatic bimetal
触点类型Contact type	快速动作接点snap–action contact
触点电阻Contact resistance	< 10mΩ
使用寿命Service life	> 100,000 cycles
开关最大容量 Max. Switching capacity	250VAC, 10 (4) A 120VAC, 10 (4) A DC 30W
最大开关容量NC Max. Switching capacity, NC	250VAC, 5 (2) A 120VAC, 5 (2) A DC 30W
EMC	Acc. To EN 55014–1–2, EN 61000–3–2, EN 61000–3–3
接线方式Connection	4极接线端子2.5mm²导线 4–pole terminal,clamping torque 0.5Nm max.:rigid wire 2.5mm² stranded wire (with wire end ferrule) 1.5mm²
安装方式Mounting	35mm DIN轨道 clip for 35mm DIN rail,EN60715 or for exit filter EF 118 Series
外壳材料Casing	塑料UL94标准V-0防火等级, plastic according to UL94 V-0, light grey
外观尺寸Dimensions	67 x 50 x 38mm
重量Weight	Approx. 0.10kg
安装位置Installation position	任意variable
操作/储存温度Operating/Storage temperature	–20 to +80℃ (–4 to +176°F) / –45 to +80℃ (–49 to +176°F)
防护等级Protection type	IP20

*连接端子N(RF加热电阻器)可反馈热量信号，从而减少温差大约0.5K。

*Connecting terminal "N" (RF heating resistor) causes the thermal feedback to work and so reduces the switch temperature difference to approx. 0.5K.

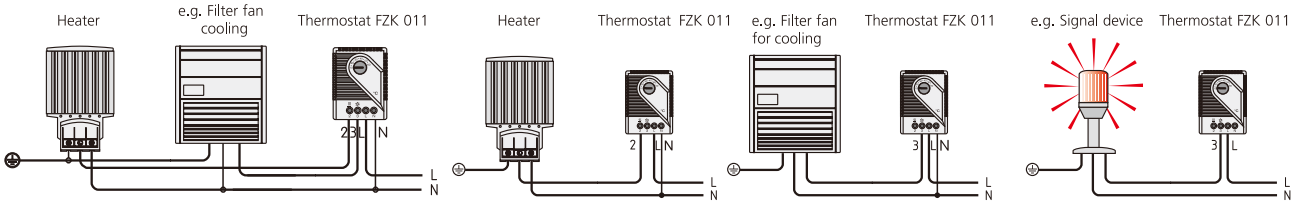

接线示意图 Example of connection

订货代码 Art. No.	操作电压 Operating voltage	设定范围 Setting range
01170.0-00	230VAC	+5 to +60℃
01170.0-01	230VAC	+40 to +140°F
01170.0-02	230VAC	–20 to +30℃
01170.9-00	120VAC	+40 to +140°F
01170.9-01	120VAC	+5 to +60℃

ELECTRONIC THERMOSTAT
电子式温控器

saipwell

ET 011 24VDC

产品特性 Features

- 高直流分断能力High DC breaking capacity
- 低滞后Low hysteresis
- 可调整温度Adjustable temperature
- 切换接点Change–over contact
- 导轨安装DIN rail mounted

直流24V高性能电子温控器，可以调控加热器散热以及信号装置。与机械式温控器相比,ET011有低滞后性，使切换点和设置精度更加精确。

Electronic thermostat for regulating high performance DC 24V equipment. Heating or cooling appliances as well as signal devices can be switched via the potential free change–over contact. In comparison to mechanical thermostats, the ET 011 has a low hysteresis making the switching point and setting accuracy more precise.

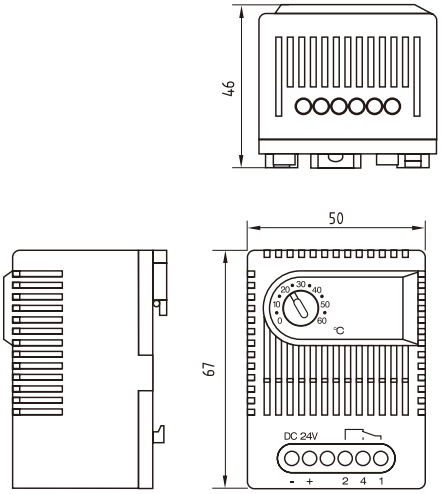

技术参数 Technical Data

开关温差Switch temperature difference	Approx. 3K
传感器元件Sensor element	PTC
触点类型Contact type	切换型Change–over
触点电阻Contact resistance	< 10mΩ
使用寿命Service life	> 100,000 cycles
最大开关容量Max. switching capacity	28VDC，16A
EMC	Acc. To EN 55014–1–2, EN 61000–3–2, EN 61000–3–3
接线方式Connection	5极接线端子2.5mm²导线 5–pole terminal,clamping torque 0.5Nm max.:rigid wire 2.5mm² stranded wire (with wire end ferrule) 1.5mm²
安装方式Mounting	35mm DIN轨道 clip for 35mm DIN rail,EN60715 or for exit filter EF 118 Series
外壳材料Casing	塑料UL94标准V-0防火等级, plastic according to UL94 V-0, light grey
外观尺寸Dimensions	67 x 50 x 46mm
重量Weight	Approx. 80g
安装位置Installation position	□□variable
□□/□□□□Operating/Storage temperature	0 to +60℃ (32 to +140°F) / –45 to +80℃ (–49 to +176°F)
防护等级Protection type	IP20

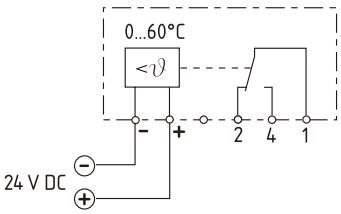

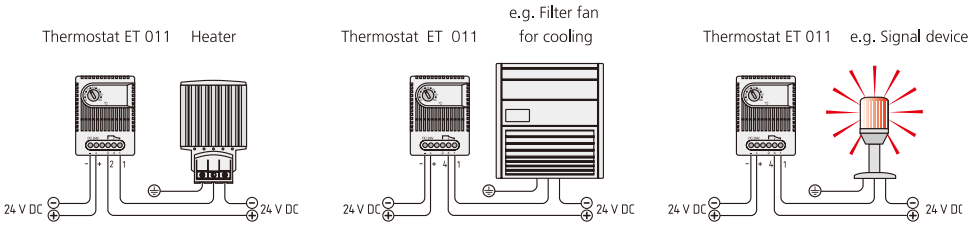

接线示意图 Example of connection

订货代码	操作电压	温度设定范围
Art. No.	Operating voltage	Setting range
01190.0-00	24VDC (20–28VDC)	0 to +60℃

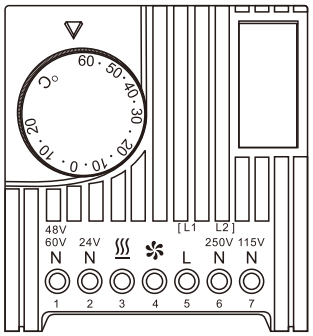

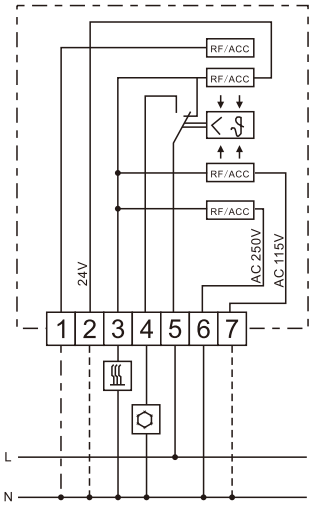

Thermostat
SK3110.000

接线示意图 Example of connection

SK3110.000

产品特性 Features

主要用于控制风机、加热器和转换器，也可以用于监控配电柜内的温度。

Especially used for controlling fan filter, heater and exchanger,also could be monitoring the electric cabinetinner temperature when working as signal arcuser.

参数说明 Parameter Clarification

◇温度调节范围：–20℃到+60℃

◇重量：105克

◇外观尺寸：70×70×33.5mm

◇使双金属传感器热灵敏度设置反馈热。

◇接触点方案：单开关接触点为瞬时开关组件

◇允许接触点荷载

◇Adjusting range:–20℃ to +60℃

◇Weight:105g

◇Size :70 × 70 × 33.5mm

◇Make bimetal sensor as heat sensitivity set to feedback of heat.

◇Contact point scheme: single switch over contact point as instant switch component

◇allowed load of contact point

KL5–3

AC10(4)A

DC=30W

KL5-4(冷却)(Cooling)

AC5(4)DA

DC=30W

（D）=在COS ϕ = 0.6敏感性负

◇开关误差 1K±0.8K

◇宽电压范围, 24V~230V

◇连接方便, 端子能够从外部用螺丝固定连接.

◇安装简单, 它能够垂直或水平安装在35mm导轨上.

◇Switch discrepancy"1K±0.8K

◇Voltage scope is wide, any type could be used from 24V to 230V

◇Time-saving connection, terminal block could be installed with screw from outside

◇Easy installation, it could be installed to 35mm din rail vertically or horizontally

REX HAZARDOUS AREA THERMOSTAT
防爆型温控器

REX 011 15℃, 25℃

产品特性 Features

- 紧凑型设计Compact design
- 可设置温度Set temperature
- 高分断能力High switching capacity

小型机械式防爆温控器用于调节温度和控制热量。例如在传送装备中,控制面板和测量仪器被放置在防爆区域。这种特殊的监控器体积小,温度精度高(误差小)、寿命长,可直接控制加热器。

Compact small mechanical thermostat for temperature regulation and monitoring of heaters, for example in transmitter cabinets, control panels and measuring equipment which are deployed in areas with explosion hazard. The special switch construction enables high response accuracy, small switch temperature difference and a very long service life. High switching performance allows direct control of the heaters.

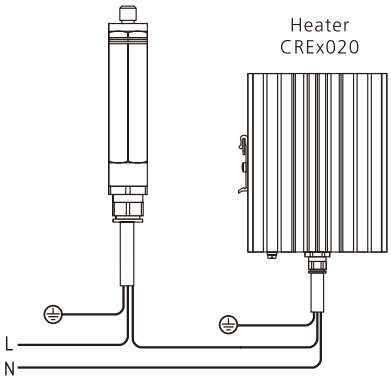

接线示意图 Example of connection

技术参数 Technical Data

Explosion proof according to EN	LCIE (Laboratoire Central des Industries Electriques)
符合的认证Conformity certificate	01 ATEX 6074/02, LCIE N° 06 ATEX Q8011, IECEx LCI 07. 0021
传感器元件Sensor element	感温材料thermostatic bimetal
触点方式(1P)Contact type (1–pole)	打开控制温度上升opens with rising temperature
使用寿命Service life	> 100,000 cycles
最大开关容量Max. Switching capacity	250VAC, 4 (1) A
接线方式Connection	Si HF – JZ 3 x 0.75mm² length 1m
安装方式Mounting	安装支架带M8螺母mounting bracket with nut M8 (see illustration)
外壳材料Casing	铝aluminium, black anodised
外观尺寸Dimensions	length 110mm
重量Weight	approx. 0.20kg
安装位置Installation position	任选variable
操作/储存环境Operating/Storage temperature	–20 to +40℃ (–4 to +104°F)/–45 to +70℃ (–49 to +158°F)
防护等级Protection type/Protection class	IP65 / I (earthed)

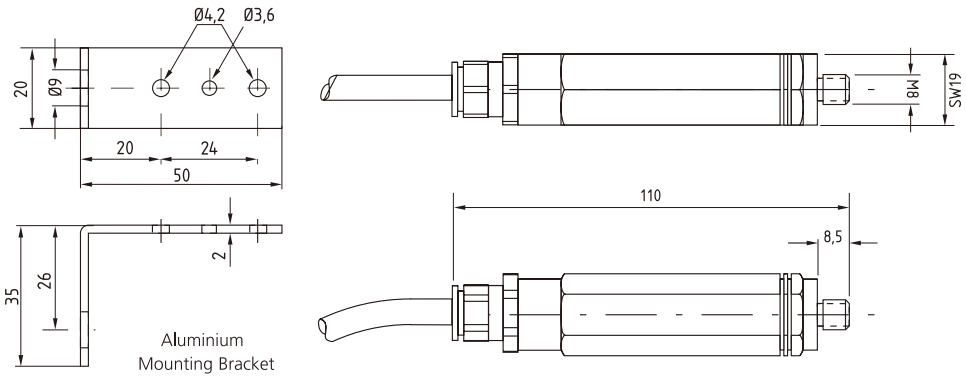

接线示意图 Example of connection

订货代码	Ex保护等级	开关温度	开启温度差
Art. No.	Ex protection type	Switch–off temperature	Switch temperature difference
01180.0–00	d IIC T6 - Ex tD A21 IP6X T85℃	+15℃(± 4K tolerance)	4K (± 1K tolerance)
01181.0–00	d IIC T6 - Ex tD A21 IP6X T85℃	+25℃(± 4K tolerance)	4K (± 1K tolerance)

EFR 012

产品特性 Features

- 高分断能力High switching capacity
- 灵敏度高High switching capacity
- 可调节湿度Adjustable humidity
- 切换接点Change-over contact
- 导轨安装DIN rail mounted

当配电箱内相对湿度超出65%时，EFR012可控制加热器加热，以减少水份凝结和有效防止腐蚀。与机械式温控器相比，EFR012有低滞后性，使切换点和设置精度更加精确。

When the relative humidity in the power distribution box exceeds 65%, EFR012 will control the heater heating, in order to reduce the moisture condensation and effectively prevent corrosion. Compared with mechanical thermostat, EFR012 with low hysteresis, making it's switching point and setting accuracy more precise.

技术参数 Technical Data

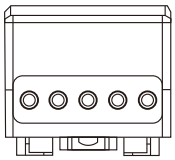

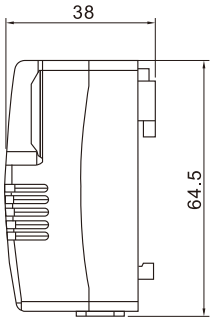

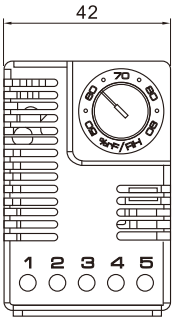

开关湿差Switch temperature difference	5% RH(±3% RH tolerance)at 25℃
传感器元件Sensor element	PTC
触点类型Contact type	切换型Change-over
触点电阻Contact resistance	< 10mΩ
使用寿命Service life	> 100,000 cycles
最大开关容量Max. switching capacity	28VDC, 16A
EMC	Acc. To EN 55014-1-2, EN 61000-3-2, EN 61000-3-3
接线方式Connection	5极接线端子2.5mm²导线 5-pole terminal,clamping torque 0.5Nm max.:rigid wire 2.5mm² stranded wire (with wire end ferrule) 1.5mm²
安装方式Mounting	35mm DIN轨道 clip for 35mm DIN rail,EN60715 or for exit filter EF 118 Series
外壳材料Casing	塑料UL94标准V-0防火等级, plastic according to UL94 V-0, light grey
外观尺寸Dimensions	64.5 x 42 x 38mm
重量Weight	Approx. 80g
安装位置Installation position	□□variable
操作/储存温度Operating/Storage temperature	0 to +60℃ (32 to +140°F) / -45 to +80℃ (-49 to +176°F)
防护等级Protection type	IP20

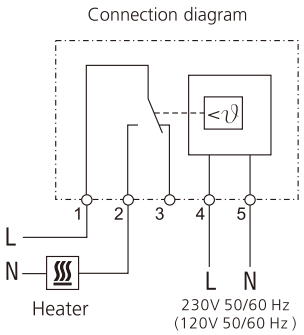

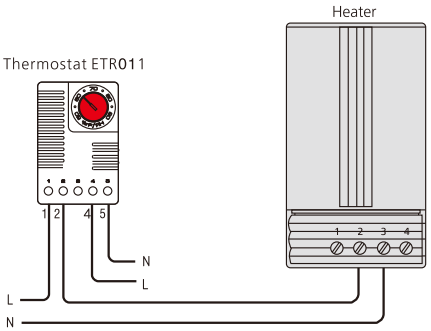

接线示意图 Example of connection

订货代码 Art. No.	操作电压 Operating voltage	湿度设定范围 Setting range humidity
01245.0-00	230VAC, 50/60Hz	40 to 90% RH VDE + UL intended
01246.0-00	230VAC, 50/60Hz	65% RH pre-set VDE + UL intended
01245.9-00	120VAC, 50/60Hz	40 to 90% RH UL intended
01246.9-00	120VAC, 50/60Hz	65% RH pre-set UL intended

MFR MECHANICAL HYGROSTAT
机械式湿度控制器

MFR 012

产品特性 Features

- 相对湿度调节Adjustable relative humidity
- 转换触点Change-over contact
- 灵敏度高High switching capacity
- 易操作Easily accessible terminals
- 导轨安装DIN rail mounted

当配电箱内相对湿度超出65%时，MFR012可控制加热器加热，以减少水份凝结和有效防止腐蚀。

The electromechanical hygrostat MFR 012 is designed to control enclosure heaters so that the dew point is raised when a critical relative humidity of 65% is exceeded. In this way condensation and corrosion is effectively prevented.

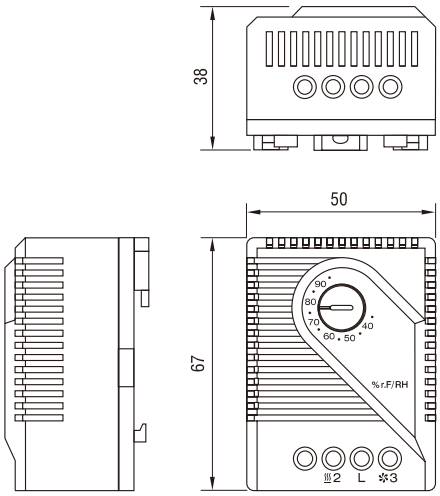

技术参数 Technical Data

开关湿度差Switch difference	4% RH (±3% tolerance)
气流速度Permissible air velocity	15m/sec
触点类型Contact type	转换触点change-over contact
触点电阻Contact resistance	< 10mΩ
使用寿命Service life	> 100,000 cycles
开关最小容量Min.Switching capacity	20V AC/DC, 100mA
开关最大容量 Max. Switching capacity	250VAC, 5 (1) A DC 20W
EMC	acc. to EN 55014-1-2, EN 61000-3-2, EN 61000-3-3
接线方式Connection	3极接线端子2.5mm²导线 3-pole terminal,clamping torque 0.5Nm max.:rigid wire 2.5mm² stranded wire (with wire end ferrule) 1.5mm²
安装方式Mounting	35mm DIN轨道 clip for 35mm DIN rail,EN60715 or for exit filter EF 118 Series
外壳材料Casing	塑料UL94标准V-0防火等级, plastic according to UL94 V-0, light grey
安装尺寸Dimensions	67 x 50 x 38mm
重量Weight	approx. 60g
安装位置Installation position	任意variable
操作/储存温度Operating/Storage temperature	-20 to+80℃(-4 to +176°F) /-45 to+80℃(-49 to +176°F)
防护等级Protection type	IP20

*at 50% RH

Connection diagram

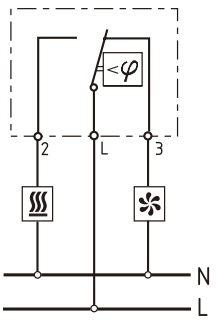

Enclosure heater

Filter fan, Cooling equipment, Signal device

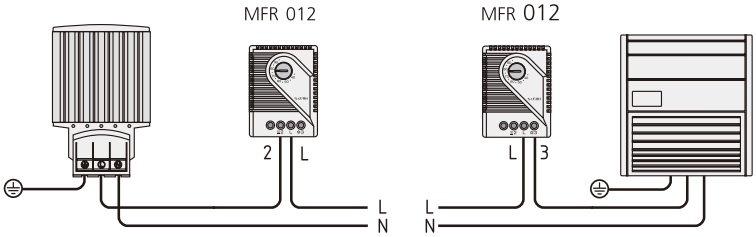

接线示意图 Example of connection

订货代码 Art. No.	湿度设定范围 Setting range
01220.0-00	35 to 95% RH

LC 013/LCF 013

产品特性 Features

- 机械式开关触点Mechanical switch contact
- 应用广泛Versatile fields of application
- 体积小Small size
- 易安装Easy to connect

风感器是用于指示风机或过滤器的风量损失。
Air flow sensor is used to indicate the air loss of a fan or fan filter.

技术参数 Technical Data

触点类型Contact type	磁触点Reed / magnet contact
常闭Normally Closed (NC)	空气流动时开关触点打开Switch contact open when air is flowing
常开Normally Open (NO)	空气流动时开关触点关闭Switch contact closed when air is flowing
最大开关电压Max. switching voltage	NC: 240VDC (UL), 240V AC/DC (VDE) / NO: 60VDC
□□□□□□Max. switching current	NC: DC 500mA / NO: DC 170mA
最大切换容量Max. switching capacity	10W (电阻负载resistive load)
风速开关切换值 Switching threshold of airflow velocity	> 2.5m/s (hysteresis: > 1m/s)
最大风速Max. airflow velocity	50m/s
触点电阻Contact resistance	< 370mΩ (with wire)
最大空气湿度Max. air humidity	70% RH (not precipitating)
使用寿命Service life	> 100,000 cycles
接线方式Connection	2条AWG26电线长度500mm，NC为黑线，NO为蓝线 2 x single strand AWG 26, length 500mm, tip of stranded wire 5mm stripped and tinned (NC: black, NO: blue)
安装方式Mounting	卡入式 alternatively integrated in protective grille (see table), mounting clamp or mounting clip
外壳材料Casing	塑料UL94-HB黑色plastic according to UL94-HB, black
安装位置Installation position	卡入风机网罩内bidirectional tab perpendicular to airflow
操作/储存温度Operating/Storage temperature	-20 to +50℃ (-4 to +122°F) / -20 to +80℃ (-4 to +176°F)
防护等级Protection type	IP20

□□□□□□□□
Airflow monitor integrated in protective grille

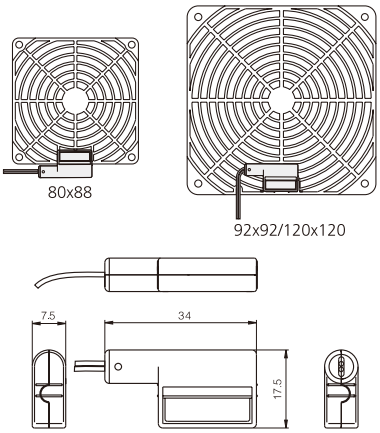

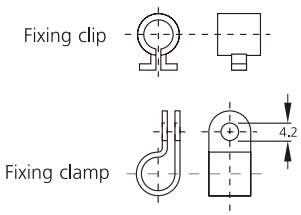

Connection example

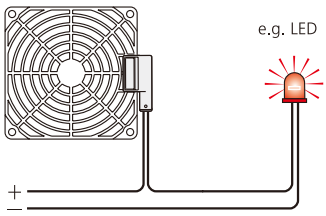

接线示意图 Example of connection

描述 Description	订货代码 Art. No.(NC)	订货代码 Art. No.(NO)	尺寸 Dimensions	重量 Weight(approx.)
Airflow monitor with mounting clamp and mounting clip LC 013	01300.0-00	01300.1-00	34 x 17.5 x 7.5mm	5g
Airflow monitor integrated in protective grille (plastic) LCF 013	01301.0-00	01301.1-00	80 x 88 x 10.5mm	20g
	01302.0-00	01302.1-00	92 x 92 x 10mm	20g
	01303.0-00	01303.1-00	120 x 120 x 10mm	30g

配件

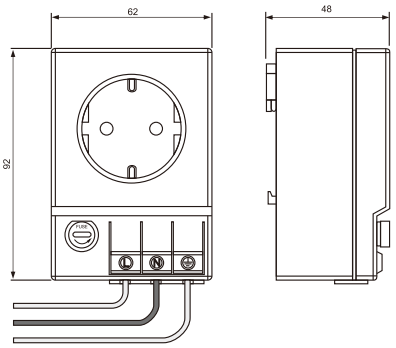

SD 035

产品特性 Features

- 快速连接Quickly connected
- 可带或不带保险丝Available with or without fuse
- 固定夹Clip fixing

导轨安装的电源插座，可以快速安装和连接到配电箱，允许使用辅助产品，如手提灯，测量装置，电烙铁等。该产品适合带保险丝及不带保险丝使用。符合大部分国家及地区插座标准。

The DIN rail mounted electrical socket can be quickly fitted and connected inenclosures allowing the use of auxiliary products such as hand lamps, measuring devices, soldering irons etc. The unit is available with and without fuse and in manyworld sockel standards.

技术参数 Technical Data

连接Connection	3 x 压力钳夹刚性导线0.5-2.5mm^2 3 x pressure clamps for stranded and rigid wire 0 5-2 5mm^2
安装Mounting	夹为35mm的导轨，EN 60715 clip for 35mm DIN rail，EN 60715
套管Casing	塑料依据Plastic according to UL94 v-O，浅灰色light grey
尺寸Dimensions	92x62x48mm
重量Weight	大约 approx.0.2kg
安装方式Fitting position	可变的 variable
工作/储存温度 Operating/Storage temperature	-45 to+70° C(-49 to+158° F)
工作/储存湿度 Operating/Storage humidity	最大90%RH(非冷凝) Max 90%RH(non—condensing)
保护类型/防护等级 Protection type/Protection clas	IP20 / I(earhed)

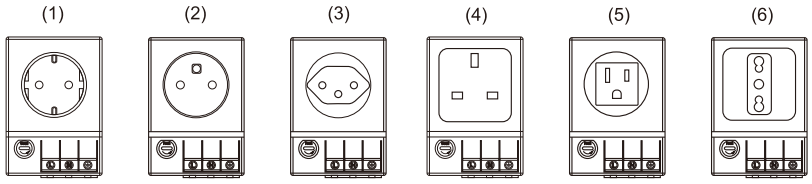

订货代码 Art. No.	操作电压 Operating voltage	插座 Socket	模式 Model	额定电流 Nominal Current
03500.0-00	250VAC	Germany/Russia(1)	with fuse* 带熔丝	6.3A
03500.0-01	250VAC	Germany/Russia(1)	without fuse 不带熔丝	16.0A
03501.0-00	250VAC	F/PL/CZ/SK(2)	with fuse* 带熔丝	6.3A
03501.0-01	250VAC	F/PL/CZ/SK(2)	without fuse 不带熔丝	16.0A
03502.0-00	250VAC	Switzerland(3)	with fuse* 带熔丝	6.3A
03502.0-01	250VAC	Switzerland(3)	without fuse 不带熔丝	10.0A
03503.0-00	250VAC	UK/Ireland(4)	with fuse* 带熔丝	6.3A
03503.0-01	250VAC	UK/Ireland(4)	without fuse 不带熔丝	13.0A
03504.0-00	125VAC	USA/Canada(5)	with fuse* 带熔丝	6.3A
03504.0-01	125VAC	USA/Canada(5)	without fuse 不带熔丝	15.0A
03505.0-00	250VAC	taly(6)	with fuse* 带熔丝	6.3A
03505.0-01	250VAC	talyf(6)	without fuse 不带熔丝	16.0A

*fuse 熔丝 Φ5x20mm

SP-1000

摘要 Summary

SP–1000温控器通常用于商业、工业和民用建筑，它能控制空调的风机线圈、水阀，使温度保持在设定的范围内。

SP-1000 series thermostats are usually used on the commercial, industrial and civil constructions, which can control the fan coil of air-conditioning,water valve and wind valvelet. It can make the temperature balance in the setting range in the location, and switches are manual witch, Very simple to manipulate.

SP-1000

特征 Characteristics

拨动按钮来设置温度：指示的那个地方显示的是当前温度值。
系统开关：用以打开/关闭温控器。
工作开关：加热/制冷开关，加热/制冷模式。
风速开关：低速–中速–高速，风闸控制器无此功能。

Dialing button for setting the temperature: The place the finger points to is the current temperature value.
ON/OFF Switch for System: Press ON/OFF Key to turn on/off of the thermostat .
Working Mode switch: Press HEAT/COOL key to switch the heating / cooling mode.
Fan Speed Key:-L-M-H,that is, Low speed-Middle speed-High speed, Wind valve controller does not have this flection.

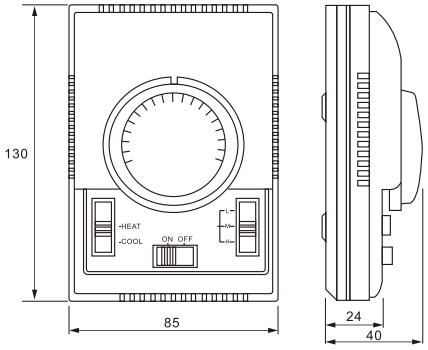

功能说明 Functions spec

型号 Model	功能说明 Function Explanation	控制对象 Objects Controlled
SP-1000	4 tubes fan coil controller , can be set up to control the fan coil	3 gears of fan coil ,2 and 3 wire of motorized valve , magnetic value on/off wind valve ,3 wires of wind valve .

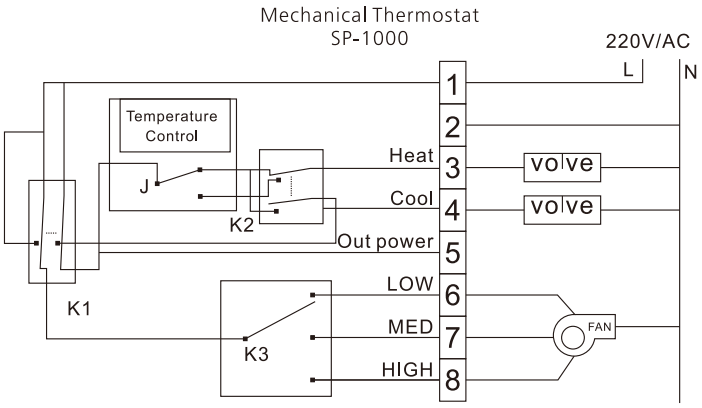

接线示意图 Example of connection

MECHANICAL THERMOSTAT

SP-2000 机械式温控器

SP-2000

技术参数 Technical Data

- 应用: 适用于中央空调
- 温度控制范围: 10℃~30℃
- 工作电压: 220V~/50Hz
- 最大负载: 10A
- Application: control of central air conditioner or heating
- Temperature control range: 10℃~30℃
- Work voltage :220V~/50Hz
- Max load :10A
- SENSOR type: gas filled sylphon
  With on/off swich ,without LED indicator for power

房间温度控制器 Room Temperature Controller

应用于水暖（地暖）采暖系统，可用于商业楼，住宅楼，轻工大厦等直接采用电加热系统的地方。

For the control of warm-water(floor)heating systems and direct electric heating systems used in Commercial buildings,Residential buildings, Light in dustrial buildings...

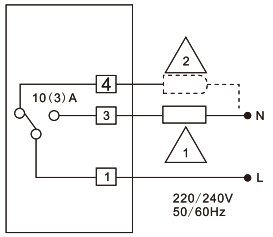

A

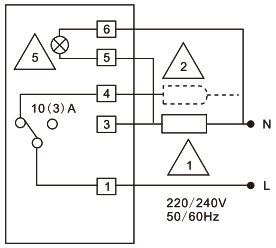

B

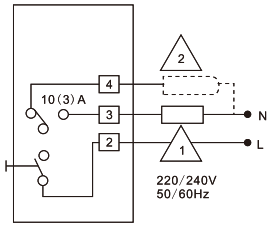

C

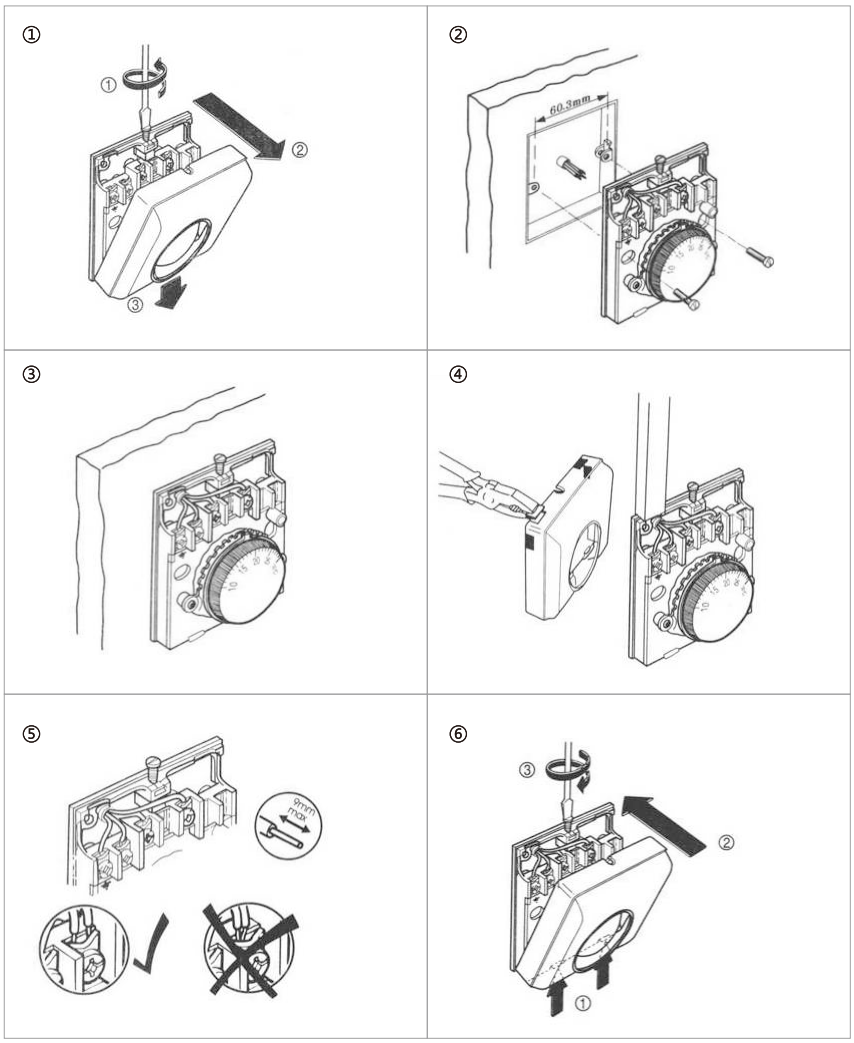

SP-6000

概述 Overview

该RTC70.xx用于两位控制带开关输出的室内温度控制，其依靠一个放置在恒温器外部或内部的NTC传感器来控制。温控器使用其内置传感器或地板传感器获取室温，当室内温度降至设定点以下，加热器将开始工作。

The RTC70.xx is used for 2-position control with on/off output for the control the temperature by means of an NTC sensor placed externally or internally in the thermostat. the thermostat acquires the room temperature with its built-in sensor or floor sensor, and the heating contact will close when the room temperature falls below the selected setpoint.

SP-6000

应用 Application

应用于水暖（地暖）采暖系统，可用于商业楼，住宅楼，轻工大厦等直接采用电加热系统的地方。

For the control of warm-water(floor)heating systems and direct electric heating systems used in Commercial buildings,Residential buildings, Light in dustrial buildings...

功能特性 Afeatures

当手动打开加热开关后，LED指示灯亮。旋钮是为了方便控制加热装置输出的开与关。

LED in dicator is light when heating is onwith manual switch and knob for easy operation On/off control output for heating device

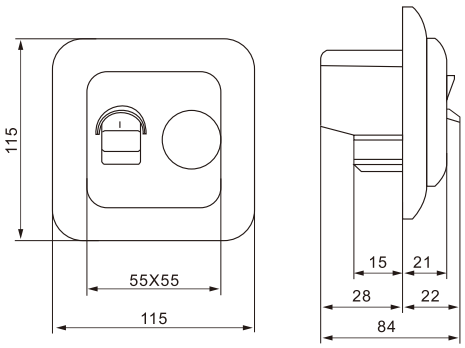

技术参数 Technical Data

电压：AC230V
电流：16A
功耗：5W
温控范围：4℃～45℃
温度开关偏差：±0.5K
环境温差：-5℃～50℃
外壳防护：IP20
外壳材质：热塑性橡胶，NTC探头
外置传感器：线长度为3米

Voltage: AC230V
Output relay: 16A
Power consumption: 5W
Setting range: 4℃～45℃
Switching differential: ±0.5K
Ambient temperature: -5℃～50℃
Protective housing: IP20
Housing material: self-exting uishing PC
Floor sensor: rubber-thermoplastic NTC sensor
Cable length is 3m

Mechanical Thermostat
SP-6000

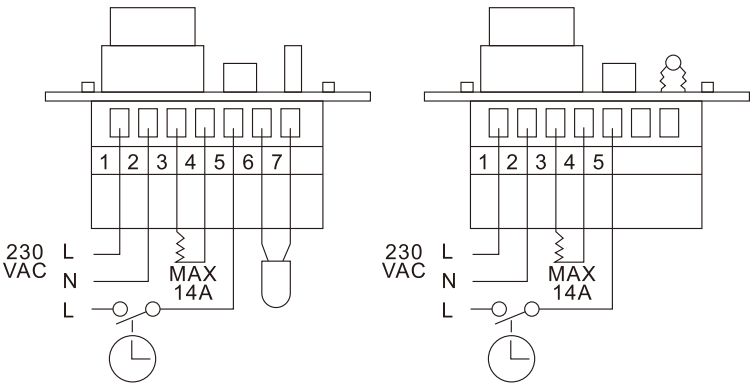

接线示意图 Example of connection

MECHANICAL THERMOSTAT
机械式温控器

SP7000

产品特性 Features

■房间温控器使用说明 Use Instructions Room Thermostat

双金属房间温控器主要用于控制加热和中央空调，断路触点的分段能力具有电子式和机械式特点，10A,250V A.C(电阻负载)，误差值:0.5K

Bimetallic room thermostat for heating and air-conditioning installations Thermal, electrical and mechanical features Breaking capacity on opening contact,10A-250V A.C.(ohmic load) Differential: 0.5K

■温度范围调控 Temperature's Scale Adjustment

经过近2天的安装，获得了精确的刻度调整，测量房间的温度，用一个参考温度计，放在一边温控器，持密粗面部分的旋钮，把指标用硬币，为了达到同一个值的温度计，我们建议安装设备从地板about1.5mt和远离热源。

After almost two days from the installation,to obtain a precise scale adjustment, measure the room temperature with a reference thermometer, placed aside the thermostat, holding the shagreened part of the knob, turn the index with a coin, to reach the same value of the thermometer,We suggest to install the equipment at about1.5mt from the floor and far from any heat source.

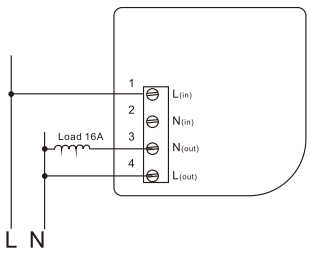

SP7000A Wiring

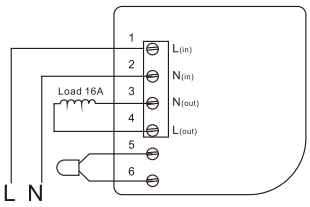

SP7000B Wiring

■零部件 Pattern

①底座Base

②盖子Cover

③上盖螺丝Cover screw

④锁销，用于固定Knob Lockpins, The lock pins for scale limitation

⑤调节盘，位于固定孔的位置，与温控器底座分隔开。

are to be derached from the base of the thermostat.They are Located on the fixing holes.

⑥刻度盘，房间温控器可以直接用螺丝安装在墙面上。

Index:The fixing of the room thermostat can be done directly on the wall by screws and nags.

B1–常闭触点

B1–With N.C.contact.

B2–常闭触点和开关

B2–With N.C.contact and ON–OFF switch

B3–单刀双掷（转换开关）

B3–With SPDT contact(change–over)

B4–转换开关（单刀双掷）和开关

B4–With change–over contact(SPDT)and ON–OFF switch

B7–冬常闭，夏常开，以及夏冬双选开关

B7–With normally closed contact on “Winter” and normally opencontact on “Summer” plus “Summer–Winter” selector–switch

注意事项 Important

①交流电源超过220V-250V时，电阻会增大。

Accelerating resistance with voltage to 220-250V a.c.

②温控器设置有加速阻力，必须完全连接好，确保温控器的正常运转。

This thermostat is provided with an accelerating resistance which mustbe absolutely connected in order to obtain the regulation's performances.

③4端口必须按照外壳图示所示，连接到空挡位置。

The terminal 4has thus to be connected to the neutral according to the diagram shown on the cover.

④该接线方式下，指示灯指示温控器的加热操作。

This connection allows also the working of the pilot lamp which indicates the operation of the heating.

SM 010 24VDC +48VDC

产品特性 Features

- 高直流分断能力High DC switching capacity
- 应用广泛Variety of applications
- 紧凑型设计Compact design
- 接线简便Simple connection
- 导轨安装DIN rail mounted

该直流电子式继电器具有较高的直流分断能力，有24VDC和48VDC两种电压可选。

Electronic relay for switching DC appliances with high switching capacity. A separate conventional switch contact is used as controller (e.g. temperature regulator, humidity regulator). The electronic relay is available in 24VDC and 48VDC versions.

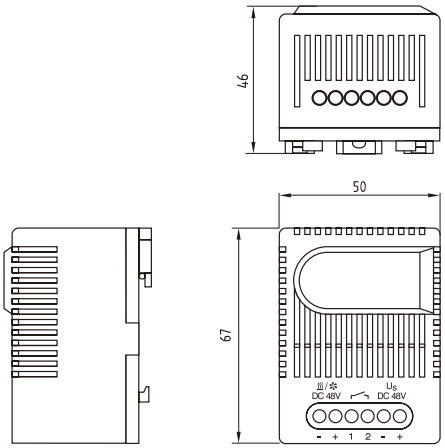

技术参数 Technical Data

触点类型Contact type	接触开关,常开contact maker, normally open (Relay/MOSFET)
触点电阻Contact resistance	< 10mΩ
使用寿命Service life	> 100,000 cycles
EMC	acc. to EN 55014-1-2, EN 61000-3-2, EN 61000-3-3
接线方式Connection	6极端子，2.5mm²导线 6-pole terminal,clamping torque 0.5Nm max.:rigid wire 2.5mm²
安装方式Mounting	35mm DIN轨道 clip for 35mm DIN rail,EN60715 or for exit filter EF 118 Series
外壳材料Casing	塑料UL94标准V-0防火等级, plastic according to UL94 V-0, light grey
□□□□Dimensions	67 x 50 x 46mm
重量Weight	approx. 85g
安装位置Installation position	任意variable
操作/储存温度Operating/Storage temperature	-20 to+80℃(-4 to +176°F) /-45 to+80℃(-49 to +176°F)
防护等级Protection type	IP20

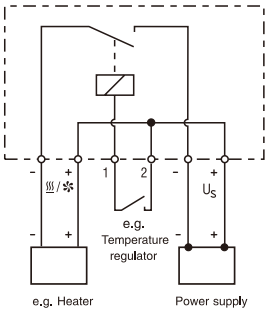

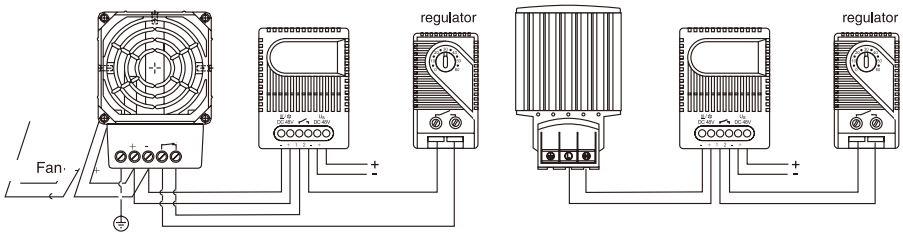

接线示意图 Example of connection

订货代码 Art. No.	工作电压 Operating voltage	最大开关容量 Max. Switching capacity
01001.0-00	24VDC (20-28VDC)	28VDC 16A
01000.0-00	48VDC (38-56VDC)	56VDC 16A